YK150XG

Standard type: Tiny type

- Arm length 150mm
- Maximum payload 1kg

Ordering method

YK150XG - 50 - [ ] - RCX240 - [ ] - [ ] - [ ] - BB

Model	Z axis stroke	Cable length	Controller	Usable for CE	Expansion I/O Note 1	Network option	Battery
YK150XG	50: 50mm	2L: 2m (Standard) 3L: 3.5m 5L: 5m 10L: 10m	RCX240	No entry: Standard E: CE marking	N, P: Standard I/O 16/8 N1, P1: 40/24 N2, P2: 64/40 N3, P3: 88/56 N4, P4: 112/72	No entry: None CC: CC-Link DN: DeviceNet PB: Profibus EN: Ethernet YC: YC-Link Note 2	BB: 4 pcs

Note 1. Use N to N4 when NPN is selected on the I/O board, and P to P4 when PNP is selected.
Note 2. Available only for the master.

Specifications

			X-axis	Y-axis	Z-axis	R-axis
Axis specifications	Arm length (mm)		75	75	50	–
	Rotation angle (°)		+/-125	+/-145	–	+/-360
AC servo motor output (W)			30	30	30	30
Deceleration mechanism	Speed reducer		Harmonic drive	Harmonic drive	Ball screw	Harmonic drive
	Transmission method	Motor to speed reducer	Direct-coupled			
		Speed reducer to output	Direct-coupled			
Repeatability Note 1 (XYZ mm) (R °)			+/-0.005		+/-0 01	+/-0.004
Maximum speed (XYZ m/sec) (R °/sec)			3.4		0 9	1700
Maximum payload (kg)			1.0			
Standard cycle time with 0.1kg payload Note 2 (sec)			0.33			
R-axis tolerable moment of inertia Note 3 (kgm^2)			0.01			
User wiring (sq × wires)			0.1 × 8			
User tubing (Outer diameter)			ϕ4 × 2			
Travel limit			1.Soft limit 2.Mechanical stopper (X,Y,Z axis)			
Robot cable length (m)			Standard: 2 Option: 3.5, 5, 10			
Weight (kg) (Excluding robot cable) Note 4			4.0			
Robot cable weight			0.9kg (2m) 1 5kg (3.5m) 2.1kg (5m) 4.2kg (10m)			

Note 1. This is the value at a constant ambient temperature. (X,Y axes)
Note 2. When moving 25mm in vertical direction and 100mm in horizontal direction reciprocally.
Note 3. There are limits to acceleration coefficient settings. See P.430.
Note 4. The total robot weight is the sum of the robot body weight and the cable weight.

Controller

Controller	Power capacity (VA)	Operation method
RCX240	300	Programming / I/O point trace / Remote command / Operation using RS-232C communication
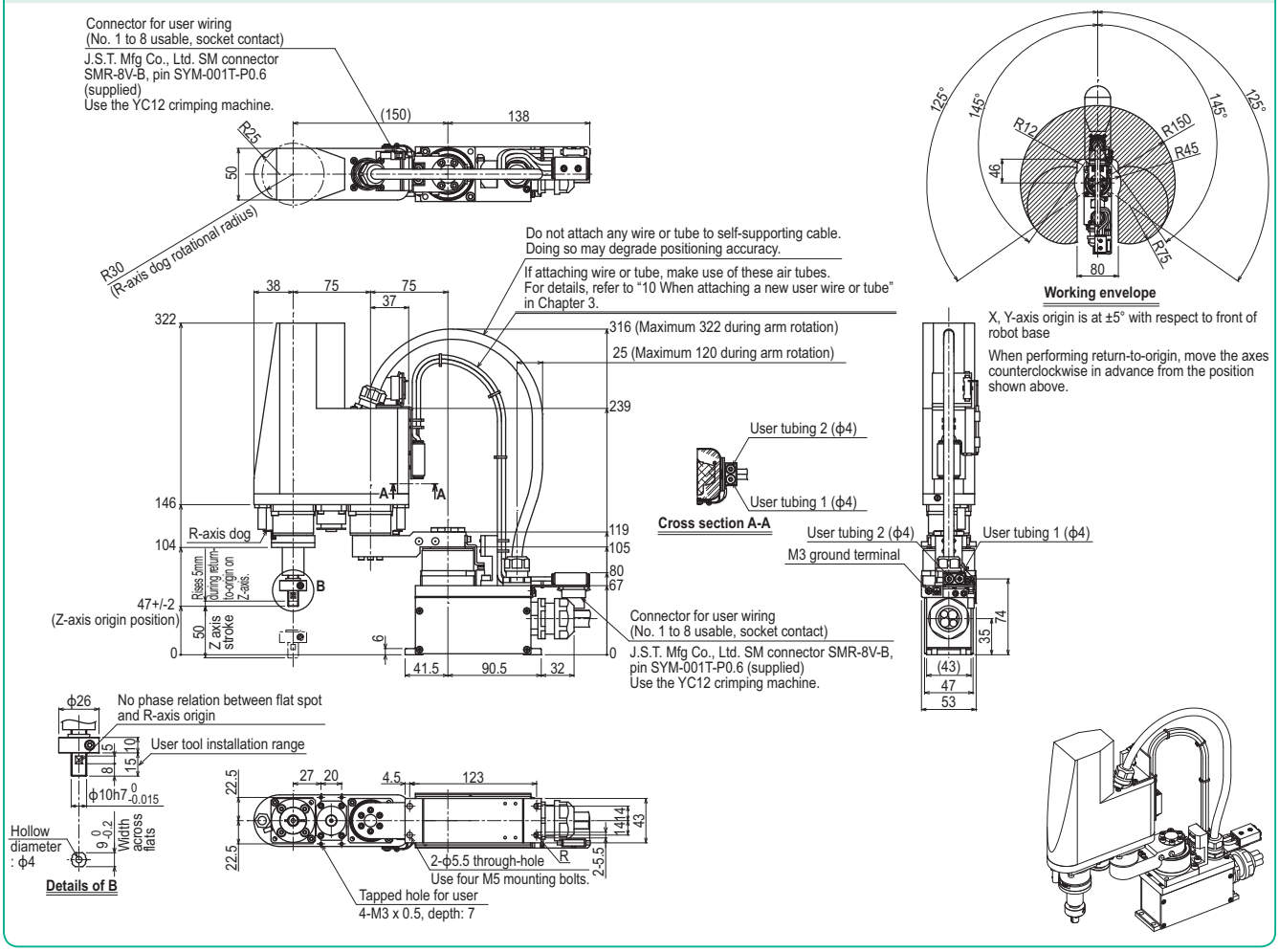
YK150XG